Montageanleitung Türklopfer ET1

Fixing instruction door knocker ET1

Mode d‘emploi pour heurtoir

1.)

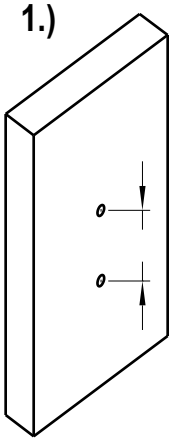

1.) Bohren Sie im Abstand von 70mm mit Ø 12mm ca. 20 mm tief in das Türblatt. Hierbei ist zu beachten, dass rechtwinklig zum Türblatt gebohrt wird.

1.) Drill with a distance of 70mm (2 ¾") two holes with ø 12 mm (1/2") and with a depth of approximately 20mm (13/16"). Pay attention that you drill right-angled to the door leaf.

1.) Percez env. 20mm (profondeur) avec un entraxe de 70mm dans la porte avec un diamètre de 12mm. Veuillez observer que le perçage est fait à angle droit.

2.)

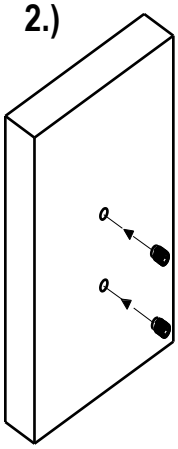

2.) Drehen Sie mit einem Sechskantschlüssel SW8 die Muffe bündig in das Türblatt ein.

2.) Screw with an allen key (SW8) the inside outside threaded screw into the door until it is flat with the surface.

2.) Tournez l‘écrou à visser planement dans la porte avec une clé à six pans (SW8).

3.)

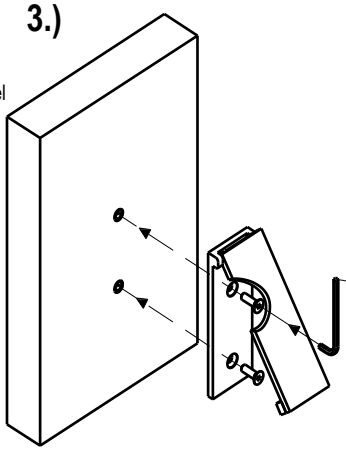

3.) Befestigen Sie den Türklopfer an der Tür, indem Sie die Schraube mit einem Innensechskantschlüssel SW5 in die Muffe drehen.

3.) Fix the door knocker on the door by turning screw in the inside-outside threaded screw with an allen key SW5.

3.) Fixez l‘ heurtoir avec une vis dans l‘ecrou à visser à l‘aide d‘une clé à six pans (SW5)

Alternative for UK-Market: Visible bolt-through fixing

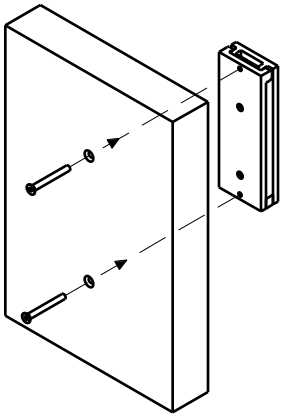

1.) Door Knocker can also be mounted bolt-through. Drill in with a distance of 130mm two holes with ø 5,5 mm through the door Pay attention that you drill right-angled to the door leaf.

Limited Warranty for USA/Canada

Karcher GmbH ("Karcher") warrants to the original retail purchaser ("Purchaser"), but to no other person, that Karcher's products ("Products") shall be free from defects in material or workmanship for a period of one (1) year following the purchase of the Products from an authorized dealer. Karcher's sole obligation under this limited warranty shall be, at the option of Karcher, to repair or replace Products which Karcher determines, in its sole discretion, to be defective and which are returned to Karcher by an authorized dealer within one (1) year from the date of purchase of the Products.

Karcher does not assume any warranty responsibility for damage to the Products due to conditions over which Karcher has no control, including but not limited to ordinary wear and tear, improper installation or maintenance, alteration, impact, accident, misuse, tampering or abuse. Karcher assumes no responsibility for tarnishing, discoloration, excessive wear or deterioration of the surface finishes due to exposure to weather conditions over which Karcher has no control. Karcher assumes no responsibility for any defects or damage caused by the Purchaser or any third parties.

KARCHER MAKES NO OTHER WARRANTIES OF ANY KIND OTHER THAN THOSE CONTAINED HEREIN AND HEREBY DISCLAIMS ALL OTHER WARRANTIES, EXPRESS OR IMPLIED, WITH RESPECT TO THE PRODUCTS INCLUDING WITHOUT LIMITATION ANY WARRANTIES OF MERCHANTABILITY OR FITNESS FOR A PARTICULAR PURPOSE. THIS LIMITED WARRANTY IS IN LIEU OF ALL OTHER WARRANTIES, EXPRESS OR IMPLIED, AND IS LIMITED TO THE DURATION OF THE LIMITED WARRANTY PERIOD. IN NO EVENT SHALL KARCHER BE LIABLE FOR ANY SPECIAL, DIRECT INDIRECT, INCIDENTAL, OR CONSEQUENTIAL DAMAGES, INCLUDING, BUT NOT LIMITED TO LOSS OF PROFITS, PROPERTY DAMAGE, DAMAGES TO BUSINESS OR BUSINESS RELATIONS, OR DAMAGES FOR LOSS OF OPERATION. THIS WARRANTY REPRESENTS KARCHER'S SOLE LIABILITY TO THE PURCHASER FOR CLAIMS RELATED TO THE PRODUCTS WHETHER THE CLAIMS ARE BASED UPON CONTRACT, TORT, OR ANY OTHER LEGAL THEORY. Karcher's total cumulative liability under this limited warranty, if any, is limited to the dollar amount of the Purchaser's original payment for the Products.

The invalidity or unenforceability of any provision of this limited warranty shall not affect the validity and enforceability of any remaining provisions, and this limited warranty and disclaimer of liability shall be construed in all respects as if any invalid or unenforceable provision is omitted.

Some states do not allow limitation on how long an implied warranty lasts or the exclusion or limitation of incidental or consequential damages so the above limitations or exclusions may not apply to you, the buyer.

This warranty gives you specific legal rights and may also have other rights which vary from state to state.

KARCHER DESIGN
Karcher GmbH
Design-Beschläge
Raiffeisenstr.32
74906 Bad Rappenau
+49-7264-91640
+49-7264-916440
mail@karcher-design.de
www.karcher-design.de

Please note: Karcher Design products are designed and measured in metric.
The inch measurements are close approximations to the actual metric dimensions